LIVESTOCK SCALES

Scales are manufactured in mild steel construction painted in black colour or in stainless steel construction. Weighing pan is made of aluminum with anti slippery surface or stainless steel. The scale has backlit LCD measuring indicator PUE C/31H installed on a 3 meter long cable.

Special software with various dampening force allows for stable and precise readout even if the animals are moving on the platform. An optional solution is a scale for measuring all herd of cattle.

- Animal weighing
- Checkweighing
- Summing function

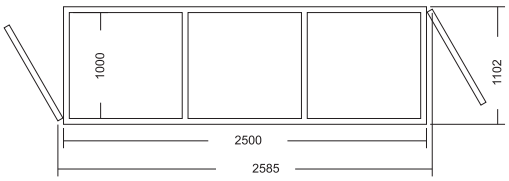

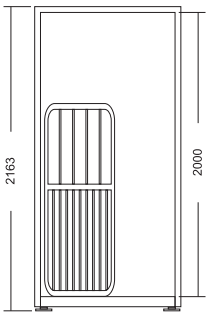

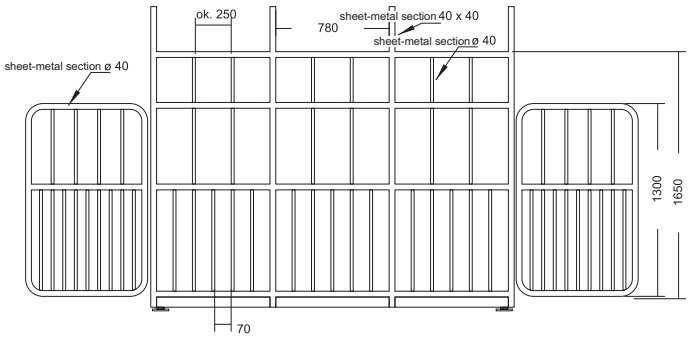

Technical data:

	WPT/4I 2000S1	WPT/4I 2000S2	WPT/4I 2000S3	WPT/4I 2000H1	WPT/4I 2000H2	WPT/4I 2000H3
Max capacity	2000 kg	2000 kg	2000 kg	2000 kg	2000 kg	2000 kg
Readability	1 kg	1 kg	1 kg	1 kg	1 kg	1 kg
Tare range	-2000 kg	-2000 kg	-2000 kg	-2000 kg	-2000 kg	-2000 kg
Pan size	1000×2000 mm	1000×2000 mm	1000×2500 mm	1000×2000 mm	1000×2000 mm	1000×2500 mm
Barriers height	1,1 m	1,8 m	1,8 m	1,1 m	1,8 m	1,8 m
Working temperature	-10° - +40 °C					
Output signal	RS 232					
IP rating	IP 65 construction, IP 66/67 indicator			IP 67 construction, IP 66/67 indicator		
Power supply	230V / 11V AC or 120V / 11V AC with internal SLA accumulator					
Display	LCD (backlit)					

Additional equipment:

RACK FOR HEAD	NEEDLE PRINTER "EPSON"
LCD DISPLAY	COMPUTER SOFTWARE: PW-WIN 2005
LARGE SIZE LCD DISPLAY	COMPUTER SOFTWARE: RAD-KEY 2000
"KAFKA" THERMAL PRINTER	RS 232/RS 485 CONVERTER

RADWAG
26-600 Radom • Bracka Street 28 • POLAND • Phone: +48 48 3848800 • Fax: +48 48 3850010 • www.radwag.com • e-mail:export@radwag.com